DISCUSSION AGENDA ITEM #1

SUPPORTING DOCUMENTATION FOLLOWS WITH: 6 PAGES

1. Annual Public Hearing on Unmet Transit Needs

DISCUSSION/ACTION AGENDA ITEM X.1
Date: April 14, 2010

Item: **ANNUAL PUBLIC HEARING ON UNMET TRANSIT NEEDS**

Background: Trinidad and all the cities in Humboldt County annually conduct a public hearing to assess the public's opinions regarding unmet transit needs.

Members of the public are encouraged to testify and address unmet needs or their perception regarding improvements that would make the transit system more usable and accessible to the public

Recommended Action: Open the public hearing to comment, close the public hearing, and instruct the staff to forward the comments to the Humboldt County Association of Governments (HCAOG).

Attachments: Correspondence from HCAOG regarding the Unmet Transit Needs public process.

HCAOG

Humboldt County Association of Governments

March 18, 2010

RECEIVED
MAR 2 2 2010

TO: HCAOG Entities; Humboldt County CAO, City Managers

FROM: Executive Director, Spencer Clifton

RE: **INITIATION OF 2010-11 UNMET TRANSIT NEEDS CYCLE REQUEST FOR ENTITY PUBLIC HEARINGS**

Each Spring, the Humboldt County Association of Governments (HCAOG) conducts an unmet transit needs public hearing process within its jurisdictional area of Humboldt County. During the annual process, the Association encourages member entities to conduct separate hearings in order to receive constituent comments for each entity's respective area of jurisdiction. Staff is providing a synopsis of the process, which includes the adopted definitions for the terms "unmet transit need," and "reasonable to meet," as well as an anticipated schedule of events for this year's process.

The California Administrative Code, as it applies to TDA Statutes, defines and necessitates conduct of the public hearing process in a manner reflecting consistency with Section 99222 of the Act. This section states:

LEGISLATIVE INTENT FOR USE OF FUNDS

99222. The Legislature hereby finds and declares that:

(a) It is the interest of the State that funds available for transit development be fully expended to meet the transit needs that exist in California.

(b) Such funds be expended for physical improvement to improve the movement of transit vehicles, the comfort of the patrons, and the exchange of patrons from one transportation mode to another.

The Code also directs HCAOG, as the Regional Transportation Planning Agency, to make the finding that there are no unmet transit needs which are reasonable to meet prior to approving fund claims for street and road purposes. Further, <u>the determination shall not be made by comparison of unmet transit needs with street and road needs.</u> The finding and determination must be made as a result of testimony received and its consideration within the Association's adopted definitions.

427 F Street, Suite 220, Eureka, CA 95501, (707) 444-8208, Fax: 444-8319, E-Mail: hcaog@pacbell.net

The Association takes this opportunity to initiate the annual unmet needs process for FY 2010-11 and recommend that a public hearing be held at your earliest possible convenience during a regularly scheduled April meeting. It would be appreciated if you would notify us of your entity's hearing date. The Association's Social Service Transportation Advisory Council (SSTAC) would like to receive a schedule of hearing dates so that they may attend the various meetings.

All comments received relative to unmet transit needs, and any previous years' unmet needs finding or recommendations should be evaluated by your entity with consideration of HCAOG's adopted definitions. Subsequently, 1) generated comments, or 2) a meeting transcript, and 3) proof of publications for the hearing notice, and 4) any respective recommendations should be forwarded to the Association's office for inclusion into the record of HCAOG's tentatively scheduled hearing on May 27, 2010. This collective information will result in the preparation of an Unmet Needs Report of Findings for 2010-11. Timely conduct of the hearing process, and submittal of the requested documentation, will allow for a June adoption of the Report, and avoid delays in the processing of TDA claims for FY 2010-11.

If the Association's staff can offer any assistance in this regard, or if you would like HCAOG staff to attend your hearing, please contact our office at 444-8208.

Attachments: A - Synopsis
B - Definitions
C - Schedule

cc: Social Service Transportation Advisory Committee (SSTAC)
Public Transit Operators
HCAOG Citizens Advisory Committee

HCAOG

Attachment "A"

Humboldt County Association of Governments

SYNOPSIS
UNMET TRANSIT NEEDS PROCESS

Pursuant to the Transportation Development Act (TDA) Statutes the Association, as the designated Regional Transportation Planning Agency (RTPA), conducts an annual unmet transit needs process. This process is directed by Sections 99238.5 and 99401.5, Articles 3 and 8, of the Public Utilities Code. These sections require the conduct of a public hearing for the jurisdictional areas of the Social Service Transportation Advisory Council (SSTAC), to receive public comment relative to unmet transportation needs. In addition to the single statutorily required hearing, all of the HCAOG entities are encouraged to conduct hearings to receive constituent comments. This expanded local process results in significantly broadening the forum for commentors.

Statutes require that any individuals or agencies expressing interest shall be notified of the conduct of the hearings; as well as the publishing of a public notice 30 days prior to the hearing. To supplement the notification process, the Association also purchases advertising in print media, conducts a comprehensive mailing to the in-house planning committee mailing lists, and informs media lists with Public Service Announcements.

The comments generated during the hearing process are included in an annual Unmet Transit Needs Report of Findings which is prepared with discussions for each HCAOG member entity's jurisdictional area. The comments are considered with respect to definitions adopted pursuant to Section 99401.5 of the Act for the terms "unmet transit needs" and "reasonable to meet". Also considered are the sizes of the transportation dependent public, the elderly, the handicapped and persons of limited means. Analyses of existing programs, public and private, and potential alternatives to meet demands are conducted as well.

At the conclusion of the required analyses, and in consideration of the adopted terms, the Association <u>must find one</u> of the following [Ref. Sec. 99401.5(d) TDA Statutes]:

1. That there are no unmet transit needs.
2. That there are no unmet transit needs which are reasonable to meet.
3. That there are unmet transit needs, including those that are reasonable to meet.

The unmet needs process concludes with the adoption of the Report of Findings, with it's included considerations and recommendations. In the event of finding that there are no unmet transit needs or that there are no unmet transit needs which are reasonable to meet, entities may expend TDA resources for non-transit purposes if excess funds remain. Finding that there are unmet transit needs, including those that are reasonable to meet, delivers a mandate to respective entity set aside funds, given that they are available, to implement a program to meet those needs deemed "reasonable to meet".

427 F St., Suite 220, Eureka, CA 95501, Ph 444-8208 Fax 444-8319 Email: hcaog@pacbell.net

Attachment "B"

Within the jurisdiction of HCAOG, **unmet transit needs** are defined as follows:

1. Transit levels identified in the Humboldt County Regional Transportation Plan (RTP) as the threshold level of services which have not been implemented or addressed.

2. Transit levels identified in the Humboldt County Regional Transportation Plan need assessments which have not been implemented or addressed.

3. Transit needs identified through the public hearing process, delivered in writing or in public testimony.

Unmet transit needs may be found to be **reasonable to meet** if all of the following conditions prevail:

1. A significant level of support exists for the public subsidy of transit services designed to address the unmet transit need, including but not limited to, support from community groups, community leaders, and community meetings reflecting a public commitment to public transit.

2. Sufficient funding is forecast to be available on a long-term basis from the respective entity or entities' Local Transportation Fund for the purpose of providing services to address the unmet transit need.

3. The complete cost of addressing the unmet transit need justifies service implementation of continuation in terms of the size of the transit dependent public, passengers served, severity of need, and feasibility.

4. Transit services designed or intended to address an unmet transit need shall not duplicate transit services currently provided either publicly or privately.

5. Transit services designed or intended to address an unmet transit need shall in all cases make coordinative efforts with transit services currently provided, either publicly or privately.

Attachment "C"

PROPOSED SCHEDULE
2010-11 Fiscal Year

• March 2010	TDA fund estimates and notice of initiation of unmet needs cycle for FY 2010-11.
• April/May 2010	Conduct of entity hearings to receive public input regarding unmet transit needs.
• May 2010	Conduct of HCAOG jurisdictional public hearing, and incorporation of entity hearing comments for consideration in the Report of Findings.
• June 2010	Preparation of a **Draft** Report of Findings for circulation, review and amendments by SSTAC, TAC, and the HCAOG Board prior to adoption of **Final**.

DISCUSSION AGENDA ITEM #2

SUPPORTING DOCUMENTATION FOLLOWS WITH: 7 PAGES

2. Appointment of Members to the Trinidad City Planning Commission

DISCUSSION/ACTION AGENDA ITEM X.2
Date: April 14, 2010

Item: **APPOINTMENT OF MEMBERS TO THE TRINIDAD PLANNING COMMISSION**

Background: There are two vacancies on the Planning Commission that are the result of resignations from Judy Lake and Chi-Wei Lin. A deadline of March 31, 2010 was set to receive applicants to fill those two vacancies. Two persons have expressed an interest to be appointed.

At the last Council meeting, Mayor Binnie suggested that each of the Council members should ask questions of the applicants, if they desire to do so, in advance of the April 14 meeting.

The two applicants are:

Gayle Rothell
and
Chris Hinderyckx

The available terms for the two open positions are:

Term 1 expires 12/31/10
Term 2 expires 12/31/10

Council members should be prepared to discuss any "interviews" with the applicants at the April meeting if you chose to contact one or both of the applicants.

Recommended Action: Appoint Gayle Rothell (term expiring 12/31/10 and Chris Hinderyckx (term expiring 12/31/10) as Trinidad Planning Commissioners.

Attachments: Letter from applicant Chris Hinderyckx:
Letter from applicant Gayle Rothell; and
Letters of support for Gayle Rothell.

Trinidad City Clerk

From: chris hinderyckx [mandolinquint@gmail.com]
ent: Tuesday, March 02, 2010 9:35 AM
To: Trinidad City Clerk
Subject: Re: Vacancy Notice

To Whom it may concern.

I am writing to express my interest in the open committee positions. I realize I am a bit late for the stated deadlines for application but if there is still an opening I am interested.

I have experience being involved in a number of community organizations over the years. I am currently on the board of WISH, a women's crisis shelter in Southern Humboldt and have done fundraising for the Heart of the Redwoods Community Hospice. I also helped organize many musical events and was a co-founder of the Southern Humboldt Mycological Society.

I realize that none of this really has much to do with city planning but it does demonstrate some experience in working with groups for a common good. My family and I are new residents here in Trinidad and I would look forward to having the ability to participate in either committee.

Thanks for your consideration,

Chris Hnderyckx
334 Wagner St.
707-367-5853

On Dec 11, 2009, at 2:25 PM, Trinidad City Clerk wrote:

>
> The City of Trinidad needs willing and able volunteers to fill 2
> important committee postitions:
>
> - TRINIDAD PLANNING COMMISSIONER (1)
> - VACATION RENTAL ADVISORY COMMITTEE (1 or more)
>
> See pdf's attached for further details.
>
> Feel free to contact me for more information.
>
> T.G.I.F.
>
> Gabriel Adams
> Trinidad City Clerk
> P.O. Box 390
> 409 Trinity Street
> Trinidad, CA 95570
> Ph: 707.677.0223
> Fax: 707.677.3759
> www.trinidad.ca.gov
> **********
>
> <P.C.vac. posting 12-2009.pdf><VDU Advisory Notice 12-2009.pdf>

03/03/10

To Whom It May Concern —

I am submitting this letter of interest in serving the city of Trinidad, in some capacity. My hope is to share a seat with the Cities Planning Commission.

I feel my ideas and interests would greatly benefit not only the city, but the community.

Having lived in Trinidad for close to 10 years, I am well aquainted with most of the residents.

It would be an honor and a privileage to serve them and to have an opportunity to contribute to the growth and beauty of my home.

Sincerely,
R. Gayle Rothell

502-802-7371

RECEIVED
MAR 04 2010

Trinidad City Clerk

From: KLM [klm@ashlandhome.net]
Sent: Monday, March 08, 2010 6:02 PM
To: cityclerk@trinidad.ca.gov
Subject: planning commission seat/Gayle Rothell

Hello Gabe,

I am a resident of Trinidad - at 363 Ocean Ave - and would like to enthusiastically recommend to the City Council Gayle Rothell for a position on the Planning Commission. Ms Rothell is a neighbor and we have met on several occasions and discussed the possibility of this position. I believe Ms. Rothell would be an asset to this Commission in several ways. She would bring an often unheard voice to Trinidad's city government as a long time community member who has rented in Trinidad . She is well spoken and she is interested in being a team player. She is willing to make the commitment, do the research and work together with other Planning Commissioners to move projects ahead in an efficient manner. I hope the City Council will approve Ms. Rothell to a seat on the Planning Commission. Thank you for your consideration in this matter.

Karen McCarter

Monday, March 08, 2010

Gabe Adams
Trinidad City Clerk

RE: Gayle Rothell seeking position on the Planning Commission.

I am happy to offer my support for Gayle to become a member of the Planning Commission if she wishes to pursue such a position. I have known Gayle for a couple of years and find her to be a hard worker. She has frequently helped me out by taking care of my cat when I have house sitting jobs and I am sure she will be conscientious in any endeavor she undertakes.

Sincerely,

Margo Gross

COPY

Margo Gross (Naomi)

Trinidad City Clerk

From: Jason Richie [jasonrichie@yahoo.com]
Sent: Friday, March 12, 2010 2:15 PM
To: Trinidad City Clerk
Subject: Gayle Rothell--Planning Commsion

Hi Gabe,

I know Gayle Rothell and she mention that she might run for the Planning Commission. I have known her for about 5 years or so and think she would be a good person for the planning commission. She has helped out at the B & B from time to time and is a very quick learner and does not waste time. She is very thorough and I don't have to go back and re-do anything she does. I feel she is trustworthy and can take on responsibility. She does not own a home in town but lives in the City Limits at the trailer park and has been a long term resident. I think that would bring a different point of view to the planning commission. I think the commission should be made up of home owners and renters or people who rent in the trailer park. She also works various jobs in Trinidad and spends most of her time in Trinidad so I feel she is very dedicated to the town.

Sincerely,

Jason Richie

COPY

Monday, March 08, 2010

RECEIVED
MAR 15 2010

Gabe Adams
Trinidad City Clerk

RE: Gayle Rothell seeking position on the Planning Commission.

I am happy to offer my support for Gayle to become a member of the Planning Commission if she wishes to pursue such a position. I have known Gayle for a couple of years and find her to be a hard worker. She has frequently helped me out by taking care of my cat when I have house sitting jobs and I am sure she will be conscientious in any endeavor she undertakes.

Sincerely,

Margo Gross

Margo Gross (Naomi)

DISCUSSION AGENDA ITEM #3

SUPPORTING DOCUMENTATION FOLLOWS WITH: 14 PAGES

3. Request from Trinidad Union School District for Fee Waiver

DISCUSSION/ACTION AGENDA ITEM X.3
Date: April 14, 2010

Item: **REQUEST FROM TRINIDAD UNION SCHOOL DISTRICT FOR FEE WAIVER**

Background: The Trinidad Union School District is requesting a waiver of fees associated with obtaining a Use Permit from the Trinidad Planning Commission. The District has received a grant to construct a 20'x20' greenhouse (400 square feet) on the Trinidad Elementary School grounds. The greenhouse is proposed to be placed on the grounds at a location that is designated as "Open Space" by the current General Plan. This will require an application for a Use Permit because typically no structures are permitted in the Open Space designation.

It is estimated that planning staff will require approximately 8 hours at $48.00/hour to review and complete a staff report and recommendation for this application and send the required notices. The City charges an addition 25% for its time and costs. The total fee cost would be estimated to be $480.00. At this time and based in the information supplied, it is anticipated that this is a non-controversial request because neighbors have indicated their support, there are already existing structures within the "Open Space" area of the school grounds, and the property is proposed in the current draft revision to the General Plan to be "Public Use" (which would allow this type of ancillary building).

There are at least three options available to the Council:

1. Deny the request and require the District to pay the full fees;
2. Approve the request and have the City absorb the Planner's fees and its administrative fees to review and respond to this request; or
3. Approve the request but deduct the actual fees that are ultimately charged from any contribution that the Council makes next year to the rental cost of the Library space at the school ($4,000 in FY2010).

Staff Recommendation: Since the cost is somewhat minimal, it is recommended that the City absorb (not charge) for its administrative overhead, and that the actual fees charged by the Planner ($384.00) be deducted from next year's Library rent contribution to the District.

Attachments: Correspondence from Trinidad Union School District.

TRINIDAD UNION SCHOOL DISTRICT

GEOFFREY PROUST, SUPERINTENDENT/PRINCIPAL
DRAWER 3030, TRINIDAD, CALIFORNIA 95570-3030
707/677-3631 • FAX 707/677-0954
trinidad@humboldt.k12.ca.us

RECEIVED

Dear Trinidad City Council Members,

Trinidad School would like to request a Use Permit to allow the construction of a greenhouse in one of our garden areas, which is currently zoned "open space". We understand that the zoning is likely to be changed when the general plan update is complete. The school bus barn and city storage facility are currently located in this same "open space". The greenhouse would be approximately 20' x 20' and will be anchored, but not permanently fixed to a foundation.

We received a grant from Lowe's Home Improvement store to construct a greenhouse for our students. Our school gardens have grown over the past few years, improving the overall appearance of the school. We find it difficult to get seedlings started without a greenhouse in our coastal climate. We hope to be able to afford a high-quality, aesthetically pleasing structure. However, we are concerned that the expense of the permits and Use Permit will consume a large portion of our grant money. The money has to be spent within one year or we will lose this great opportunity.

When the "open space" zone is changed in the general plan update, it is our understanding that construction of accessory buildings will be permitted. Thus, a Use Permit would not be required at that time. However, if we wait for the general plan update to be complete, we will most likely have missed out on this funding opportunity. We are hopeful that the City of Trinidad will support the Trinidad School District in the Use Permit request and will fund the planning application processing costs.

The greenhouse will not affect the amount of open space available since it will be tucked near the fence, in an area that is rarely used. We have talked with neighbors and have their support for the project. Overall, this will be a great improvement for our school and for the beautiful city of Trinidad.

Your support is greatly appreciated.

Sincerely,

Ananda Morehead
Trinidad School Garden Project Coordinator

Geoff Proust
Superintendent / Principal

APPLICATION #: _____

APPLICATION TO THE CITY OF TRINIDAD
TO BE COMPLETED BY THE APPLICANT

(1) TYPE OF APPLICATION (Check One Category)

Use Permit	X	Rezone	____
Variance	____	Subdivision	____
Design Review	____	Grading Permit	____
Lot Line Adjustment	____	Other	____

(2) NAME OF PROPERTY OWNER: ~~State of California~~ Trinidad Union School District

MAILING ADDRESS: PO Box 3030, Trinidad CA 95570

PHONE #: 707-677-3631

(3) NAME OF APPLICANT / AGENT (If Different):

Trinidad School

MAILING ADDRESS: PO Box 3030, Trinidad CA 95570

PHONE #: 707-677-3631

(4) SITE LOCATION:

AP#: ~~01-110-068~~, 042-031-19

STEET ADDRESS: 300 Trinity St, Trinidad CA 9557

(5) PROJECT PROPOSAL: Approx. 20' x 20' Greenhouse, located 45' to the west of the bus barn.

PROJECT: DIAGRAM OF BUILDING AREAS

~~ADDITIONS TO TRINIDAD SCHOOL~~

SCHOOL DIST: TRINIDAD UNION ELEMENTARY ADDRESS: TRINIDAD, CALIF.

☑ EXISTING 1-A
☐ BASIC PLAN 2-A
☐ FINAL PLAN 3-A

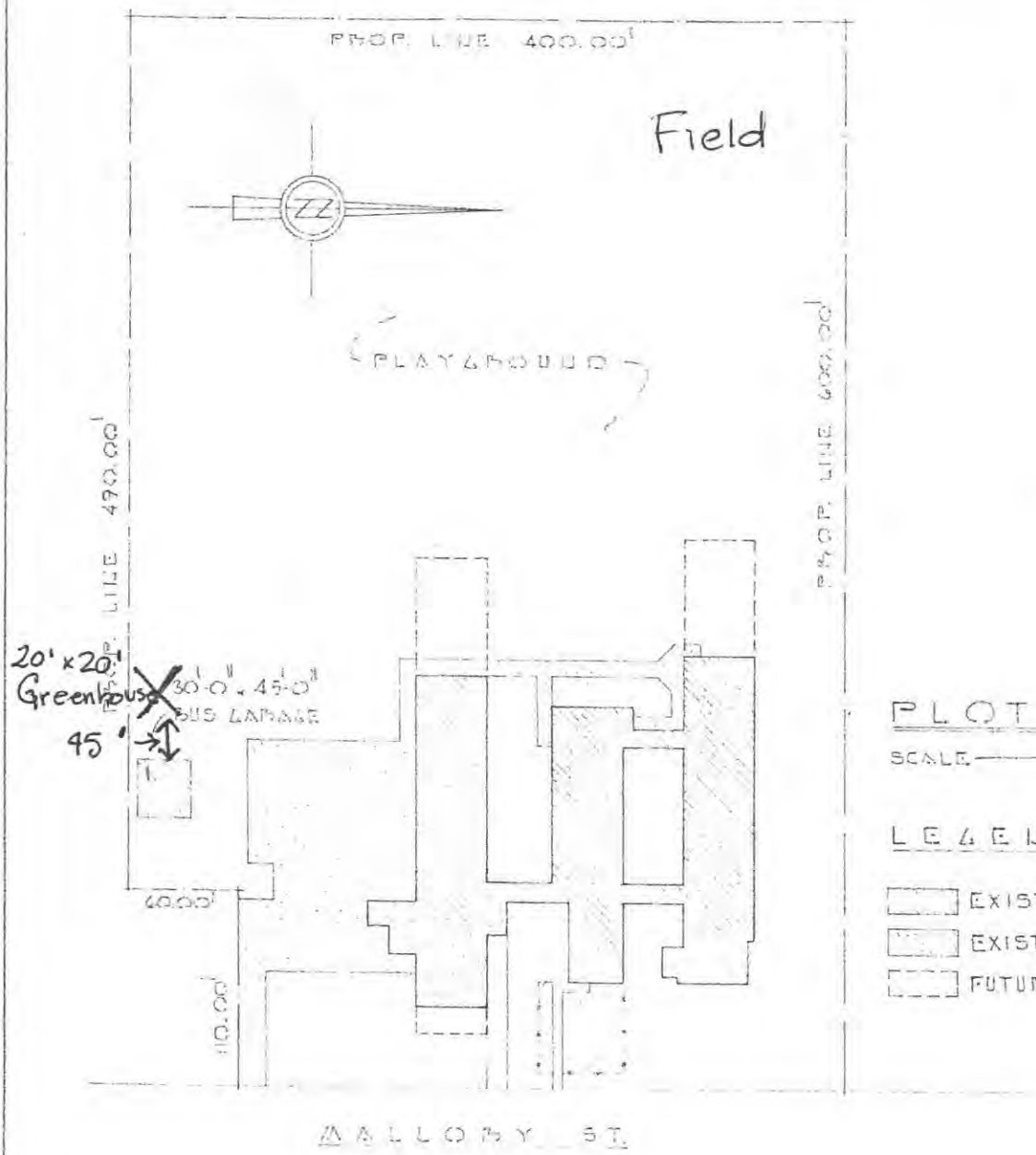

PLOT PLAN

SCALE 1" = 100'

LEGEND:

- EXISTING BUILDING
- EXISTING BLACKTOP
- FUTURE ADDITIONS

AREA OF SITE	5.2 ACRES
AREA OF EXISTING BUILDING	21,283 SQ. FT.
AREA OF EXISTING BUS GARAGE 1350 SQ FT — ADJUSTED AREA	119 SQ. FT
TOTAL ADJUSTED AREA	21,402 SQ FT

REV. DATE: 3-24-59

ABOVE IS MEASURED IN ACCORDANCE WITH ART. 2022 SUB CHAPTER 8, TITLE 5, CALIF. ADMIN. CODE

ARCHITECT

DATE: 3-6-58 SHEET 1 OF 3 SHEETS

OFFICE OF SCHOOL PLANNING

CALIFORNIA DEPT. OF EDUCATION

The City Clerk has provided the applicant with the following information:

1. Application procedures and items required for application to be complete (cover letter and project review checklist)

2. Understanding that no action shall be taken, or hearing scheduled until application is determined to be complete by the City Planner.

3. Sections of the applicable ordinance requested by the applicant.

4. Public Notice requirements (attached).

5. Amount of fee deposit required and the City's policy regarding payment of additional fee amounts.

6. Understanding that other permits and/or fees may be required (Building, Health Dept., grading, CA Dept. of Fish and Game, etc..).

7. Posting requirements for the Public Hearing (attached).

8. Affidavit of posting.

I hereby certify that the City Clerk has provided me with all the information indicated above and has answered any preliminary questions that I had.

I understand the application procedures and noticing requirements and know that failure to comply with the requirements may cause delay of permit processing, permit approval or require application to be reheard if not noticed properly.

Applicant's Signature _____ Date 3-29-10

STATEMENT OF APPLICANT UNDERSTANDING

I UNDERSTAND THAT TEN (10) COPIES OF PLANS AND SUPPLEMENTAL INFORMATION ARE REQUIRED TO ACCOMPANY THE APPLICATION AND THAT A PRE-APPLICATION REVIEW PRECEDES FORMAL ACCEPTANCE OF THE APPLICATION. I ALSO UNDERSTAND THAT INCOMPLETE APPLICATION SUBMITTALS MAY CASUE DELAY IN PROCESSING THE APPLICATION REQUEST. I HEREBY CERTIFY THAT THE ABOVE AND ALL ACCOMPLANYING INFORMATION AND PLANS ARE TRUE AND CORRECT. AND THAT THE CITY PERSONNEL ARE AUTHORIZED TO ENTER UPON THE DESCRIBED PROERTY AS RESONABLY NECESSARY TO EVALUATE THE PROJECT. FURTHER, I REVIEWED THE ATTACHED INFORMATION TO THE APPLICATION FORM AND UNDERSTAND THE APPLICATION PROCESS DESCRIBED THERIN.

Geoff Ronst

Signature of Applicant / Agent

IF THE APPLICANT / AGENT IS NOT THE OWNER OF RECORD:
I AUTHORIZE THE APPLICANT TO FIULE THIS APPLICATION AND TO REPRESENT ME IN ALL MATTERS CONCERNING THE APPLICATION.

Geoff Ronst

Signature of Owner of Record

A FILING FEE IS REQUIRED TO ACCOMPANY THIS APPLICATION.

TO BE COMPLETED BY CITY STAFF

Receipt #: _____ Receipt Amount: _____

Account: _____ Received By: _____

City of Trinidad

Date: _____

Sample Greenhouse

Sunglo 1200G Greenhouse

Price: $6,200.00

From the deserts of Arizona to the snowfields of Alaska you won't find a better greenhouse for a better price. Made with an exclusive double-wall design, called "Therma-Truss". Provides 10 times the insulating properties of single-pane glass. Basically "baseball proof"!

- Size: 10'3"W x 20'L
- Frame: Aluminum
- Panels: UV stabilized Acrylic Plexiglass
- Features "Therma-Truss" insulation: two layers of high impact acrylic form a "dead-air" space.

Help Center

Free Phone Support
Email us
Free Shipping Details
Growers Newsletter
Found a Cheaper Price?

100% Guarantee Growing Confidence: click for details

Enlarge

Enlarge

Enlarge

Item	Stock #	Price	Qty
Sunglo 1200G Greenhouse	SGG-1200G	**$6,200.00**	1

Available Options:

Add an Extension Kit?

Select Your Free Book:

Add To Cart

Usually ships within 5 days

Features & Specifications

*** Must screw greenhouse to wood base, foundation, or decking for a solid anchoring of the greenhouse. No metal base with SunGlo Greenhouses available. Anchor kits are not necessary with this greenhouse.**

Features & Specifications:

- **Size:** 10'3""W x 20'L
- **Height:** 7'7"
- Frame: Aluminum
- Easy swing door
- Panels: UV stabilized Acrylic Plexiglass
- Expandable in sections of 2 1/2 foot. (each section sold separately)
- Impact & Wind resistance
- Includes structure with storm style door (has vertical slider that exposes screening), exhaust fan/motorized shutter (sized to greenhouse) and aluminum bench framework, if requested. Also comes with detailed video and written instructions, rivet gun, rivets, drill bits, other necessary hardware, and vinyl sill-plate guards.

All models are cut to exact size and come with a demonstration video and complete written instructions, pop-rivet tools, rivets, drill bits, necessary hardware and storm-style door with vertical slider and screen.

We Also Recommend :

Sunglo 1200F Greenhouse

More Info

SUNGLO GREENHOUSE MODELS

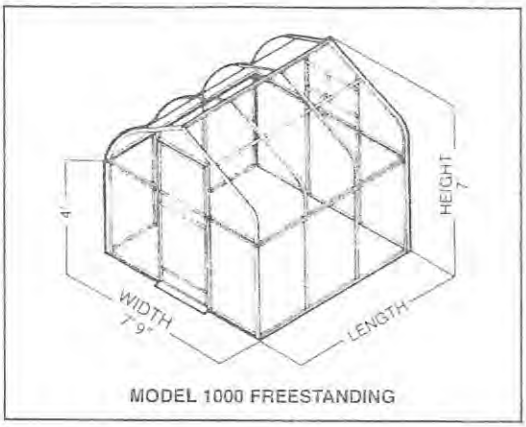

MODEL 1000 FREESTANDING

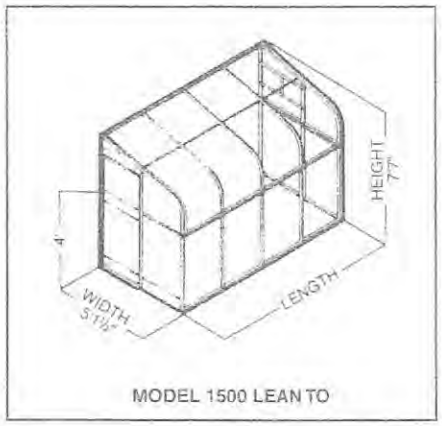

MODEL 1500 LEAN TO

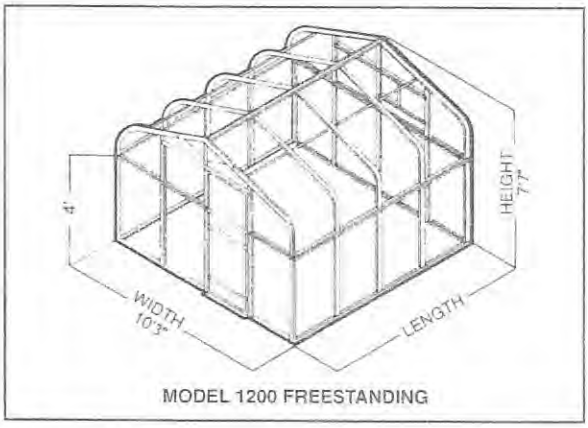

MODEL 1200 FREESTANDING

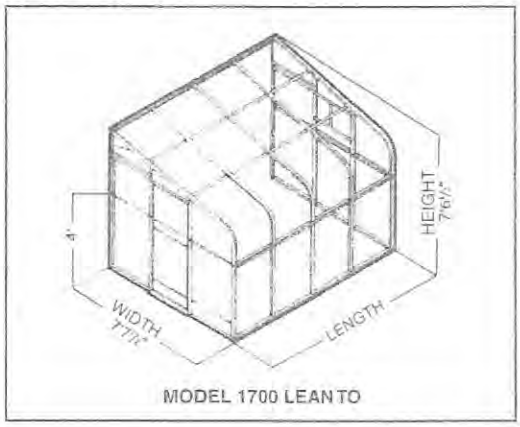

MODEL 1700 LEAN TO

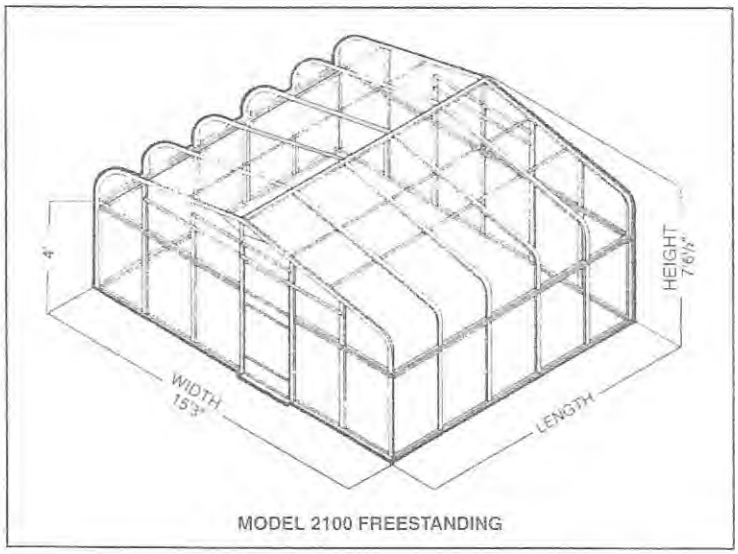

MODEL 2100 FREESTANDING

Local Installation Available — Call For Information

SUNGLO GREENHOUSES

7867 South 180th Street • Kent, Washington 98032

(425) 251-8005 • Out of State Call Toll Free 1-800-647-0606

SUNGLO GREENHOUSES PRICE LIST

Prices effective August, 2008 – Subject to change without notice

FREESTANDING GREENHOUSES

Model	Width	Length	Height	Price
1000-B	7' 9"	7' 6"	7'	$3,100
1000-C	"	10'	"	$3,550
1000-D	"	12' 6"	"	$4,000
1000-E	"	15'	"	$4,450

Additional 2 1/2' segments are $450 each.

Model	Width	Length	Height	Price
1200-C	10' 3"	10'	7'7"	$4,200
1200-D	"	12' 6"	"	$4,700
1200-E	"	15'	"	$5,200
1200-F	"	17' 6"	"	$5,700
1200-G	"	20'	"	$6,200

Additional 2 1/2' segments are $500 each.

Model	Width	Length	Height	Price
2100-E	15' 3"	15'	7' 6 1/2"	$6,700
2100-F	"	17' 6"	"	$7,300
2100-G	"	20'	"	$7,900
~~2100-I~~	~~"~~	~~25'~~	~~"~~	~~$8,100~~
2100-K	"	30'	"	$10,300

Additional 2 1/2' segments are $600 each.

LONGER & SHORTER LENGTHS AVAILABLE ON ALL MODELS.

LEAN-TO GREENHOUSES

Model	Width	Length	Height	Price
1500-B	5' 1 1/2"	7' 6"	7' 7"	$2,200
1500-C	"	10'	"	$2,475
1500-D	"	12' 6"	"	$2,750
1500-E	"	15'	"	$3,025

Additional 2 1/2' segments are $275 each.

Model	Width	Length	Height	Price
1700-B	7' 7 1/2"	7' 6"	7' 6 1/2"	$3,000
1700-C	"	10'	"	$3,425
1700-D	"	12' 6"	"	$3,850
1700-E	"	15'	"	$4,275
1700-F	"	17" 6"	"	$4,700

Additional 2 1/2' segments are $425 each.

LONGER & SHORTER LENGTHS AVAILABLE ON ALL MODELS.

ALL GREENHOUSE KITS COME STANDARD WITH AN AUTOMATIC ACTIVE VENTILATION SYSTEM

Ventilation system includes thermostatically controlled exhaust fan with matched motorized fresh air intake shutter. All models are cut to exact size and come with a demonstration video and complete written instructions, pop-rivet tool, rivets, drill bits, necessary hardware and storm-style door with vertical slider and screen. All models come with a commercial grade mill-finish aluminum framework and panels made of multiple layers of impact resistant clear acrylic.

CUSTOMER SERVICE

1-800-647-0606

FAX: 425-251-8008

Sunglo is committed to customer satisfaction, whether providing help in choosing the right accessory or assisting you in the construction of your greenhouse.
We will be glad to answer questions about your order or any of Sunglo's products
Monday – Friday 8:00 am – 4:30 pm Pacific Time
or 24 hours a day via our voice mail center for a prompt response.

SUNGLO GREENHOUSE MODELS

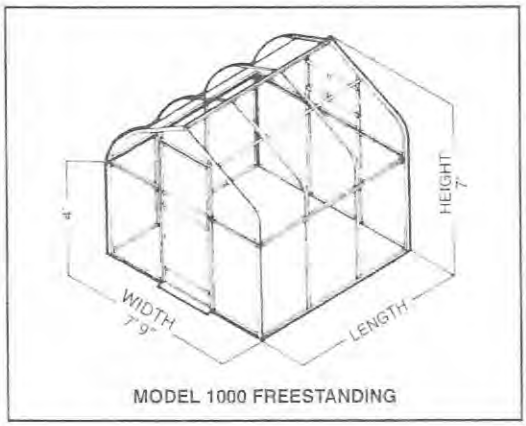

MODEL 1000 FREESTANDING

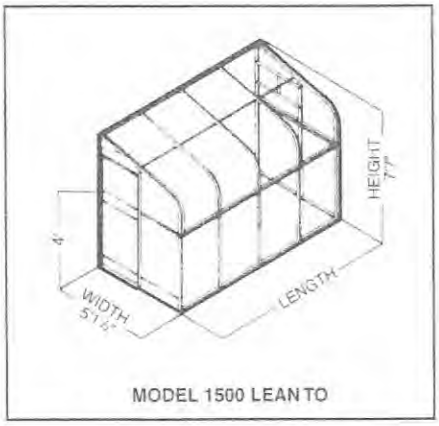

MODEL 1500 LEAN TO

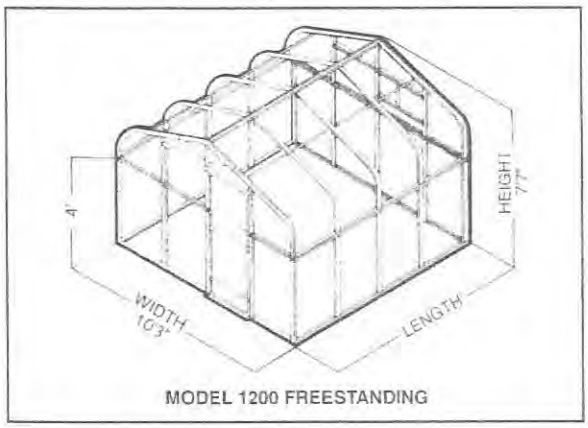

MODEL 1200 FREESTANDING

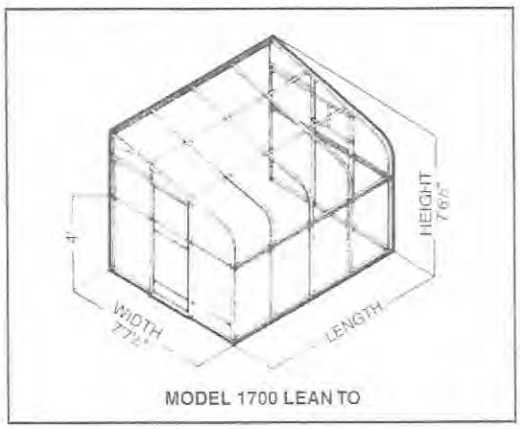

MODEL 1700 LEAN TO

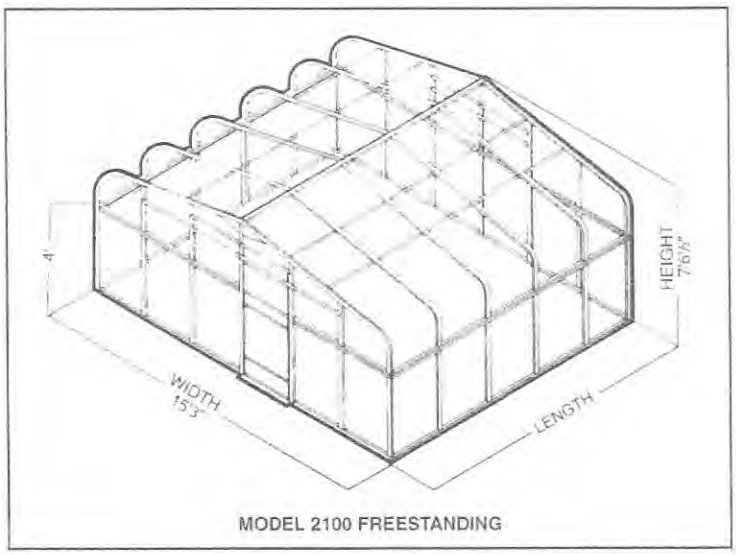

MODEL 2100 FREESTANDING

Local Installation Available — Call For Information

SUNGLO GREENHOUSES

7867 South 180th Street • Kent, Washington 98032

(425) 251-8005 • Out of State Call Toll Free 1-800-647-0606

TRINIDAD UNION SCHOOL DISTRICT

GEOFFREY PROUST, SUPERINTENDENT/PRINCIPAL
DRAWER 3030, TRINIDAD, CALIFORNIA 95570-3030
707/677-3631 • FAX 707/677-0954
trinidad@humboldt.k12.ca.us

March 22, 2010

Dear Trinidad City Council Members,

Trinidad School would like to request a Use Permit to allow the construction of a greenhouse in one of our garden areas, which is currently zoned "open space". We understand that the zoning is likely to be changed when the general plan update is complete. The school bus barn and city storage facility are currently located in this same "open space". The greenhouse would be approximately 20' x 20' and will be anchored, but not permanently fixed to a foundation.

We received a grant from Lowe's Home Improvement store to construct a greenhouse for our students. Our school gardens have grown over the past few years, improving the overall appearance of the school. We find it difficult to get seedlings started without a greenhouse in our coastal climate. We hope to be able to afford a high-quality, aesthetically pleasing structure. However, we are concerned that the expense of the permits and Use Permit will consume a large portion of our grant money. The money has to be spent within one year or we will lose this great opportunity.

When the "open space" zone is changed in the general plan update, it is our understanding that construction of accessory buildings will be permitted. Thus, a Use Permit would not be required at that time. However, if we wait for the general plan update to be complete, we will most likely have missed out on this funding opportunity. We are hopeful that the City of Trinidad will support the Trinidad School District in the Use Permit request and will fund the planning application processing costs.

The greenhouse will not affect the amount of open space available since it will be tucked near the fence, in an area that is rarely used. We have talked with neighbors and have their support for the project. Overall, this will be a great improvement for our school and for the beautiful city of Trinidad.

Your support is greatly appreciated.

Sincerely,

Ananda Morehead
Trinidad School Garden Project Coordinator

Geoff Proust
Superintendent / Principal

PLOT PLAN / TENTATIVE SUBDIVISION MAP CHECKLIST

The following must be illustrated on your plot plan / tentative subdivision map or attachments. Ten (10) copies must be submitted to the City Clerk along with your application of your development project. Please check the box to the left of the following items: (x) if illustrated on the plot plan / tentative subdivision map; (N/A) if the item does not apply; or (?) if you are uncertain if the item applies. Plot plans shall be drawn on a minimum sheet size of 8.5" x 11". Tentative subdivision maps shall be drawn on a minimum sheet size of 18" x 26".

Applicant's Name: Trinidad School AP#: ~~01-110-008~~ 042-031-19

TO BE COMPLETED BY THE APPLICANT	STAFF USE ONLY
_____ (1) Applicant's Name	_____
_____ (2) Brief Project Description	_____
_____ (3) Location Map	_____
_____ (4) The Subject Parcel	_____
_____ (5) Date, North Arrow, and Scale	_____
_____ (6) Existing and Proposed Access Roadways Adjacent to or Within the Subject Parcel	_____
_____ (7) Existing and Proposed Improvements (Label as 'Existing' or 'Proposed' with Dimensions and Distance to Nearest two Property Lines)	_____
_____ (a) Structures and Buildings (Include Floor Area, Height, and Proposed Use)	_____
_____ (b) Building Elevations Including Proposed Surface Materials and Color	_____
_____ (c) Driveways	_____
_____ (d) Utility Lines (Power, Telephone, Sewer & Water)	_____
_____ (e) Wells	_____
_____ (f) Parking and Loading Areas (Illustrate Individual Parking Areas)	_____
_____ (g) Storm Drains, Curbs, Gutters, and Fire Hydrants	_____
_____ (h) Landscaping Area (Include Proposed Exterior Lighting)	_____
_____ (i) Diked Areas	_____
_____ (j) Proposed Grading and Fill (Estimate Volume)	_____
_____ (k) Signs	_____
_____ (l) Other (Specify)	_____

_____ (8) Contour Lines (At _____ Intervals) _____
_____ (9) Direction of Surface Water Run-off _____
_____ (10) Location and Width of all Existing and Proposed Easements of Record _____
_____ (11) Name and Accessor Parcel Number _____
_____ (12) Hazardous Areas (Indicate on Map if on the Project Site or Within 400' of the Project Site) _____

_____ (a) Areas Sensitive to Flooding _____
_____ (b) Steep or Unstable Slopes _____
_____ (c) Expansive (clay) Soils _____
_____ (d) Other (Specify) _____

_____ (13) Sensitive Habitat Areas (Indicate on Map if on the Project Site or Within 400' of the Project Site) _____

_____ (a) Pacific Ocean _____
_____ (b) Creeks or Other Drainage Courses _____
_____ (c) Lakes and Ponds _____
_____ (d) Marshes and Other Areas of Ponding Water _____
_____ (e) Other (Specify) _____

_____ (14) Historical Buildings or Known Archaeological or Paleontological Resources _____
_____ (!5) Land Uses and Buildings on Adjacent Parcels, and Approximate Distances to the Closest Property Lines _____

FOR TENTATIVE SUBDIVISION MAPS ONLY:

_____ (16) Current Title Report Within Last 6 Months (2 Copies) _____
_____ (17) Approximate Dimensions and Areas of all Proposed lines _____
_____ (18) A Statement that all Easements of Record are Shown on Tentative Map and Will Appear on the Recorded Subdivision Map _____
_____ (19) For Major Subdivisions (5 or More Proposed Parcels): Proposed Drainage Improvements, or Reference to Established Standards, Appropriate Radii of All Roadway Curves _____
_____ (20) See Also Attached Requirements of the City Subdivision Ordinance

FOR VARIANCES ONLY

_____ (21) Justification Supporting Required Findings _____

LAND USE ZONING
PROJECT INFORMATION

Zoning	
Total lot area	
Total foot print area of existing structures	
Total floor area of existing structures	
Total area of existing parking and driveway	
Total number of existing parking spaces	
Total foot print area of proposed structures	
Total floor area of proposed structures	
Total area of proposed parking and driveway	
Total number of proposed parking spaces	
Total area of open space (area not covered by buildings, driveways, or parking)	
Total area of landscaping	
Total impervious surface area	

DISCUSSION AGENDA ITEM #4

SUPPORTING DOCUMENTATION FOLLOWS WITH: 2 PAGES

4. City Council Policy regarding Position on Land Development Proposals

DISCUSSION/ACTION AGENDA ITEM X.4
Date: April 14, 2010

Item: **CITY COUNCIL POLICY REGARDING POSITION ON LAND DEVELOPMENT PROPOSALS**

Background: The City of Trinidad (and each city in the County) periodically receives a request for comments on proposed land use developments or zoning-related applications in the adjacent area of County jurisdiction. Most often, these notices from the County Planning Department request comments from the adjacent jurisdiction as a matter of required notification, and the City may or may not choose to offer comments.

Occasionally, these notifications concern projects which may have significant local interest. Typically, the professional staffs may offer comments in the form of local concerns that need to be taken into account as the staff and the Planning Commission consider the proposal.

Recently, the City of Trinidad's Planning Commission was requested to provide time (at some staff cost) to consider commenting on a subdivision proposed nearby the City in County jurisdiction. No fees were paid to or requested by the City. As a result of a lengthy public discussion, a letter of comment was written that portrayed the Planning Commission's concerns regarding the project

This example raises several questions for the staff, the appointed Planning Commission, and the elected City Council:

1. Should the City of Trinidad respond to ALL requests for comments on proposals referred to it by the County?
2. How is it determined which referrals for comments should be publicly reviewed at the Planning Commission level?
3. If a proponent or opponent of a project in the County requests a public agenda item at the Trinidad City Planning Commission that involves staff work, should there be a fee schedule set to offset real costs?
4. If the Planning Commission chooses to forward comments after public discussion, should those comments be reviewed and approved by the City Council?

5. Should a pro or con position ever be taken by the City (Commission or Council) on a proposal that is in County jurisdiction?
6. What should occur if the Planning Commission and the City Council differ in their comments or position?

Staff Recommendation: City Council discussion and public input on the agenda item, and direction to the staff as deemed appropriate by the members of the Council

Attachments: None.